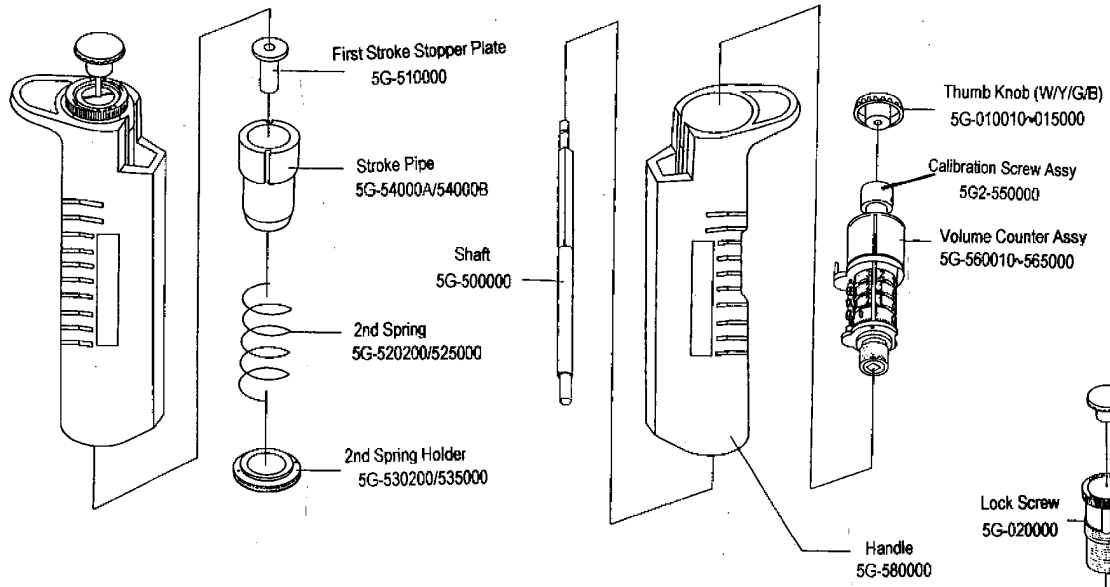

MODEL 5000DG

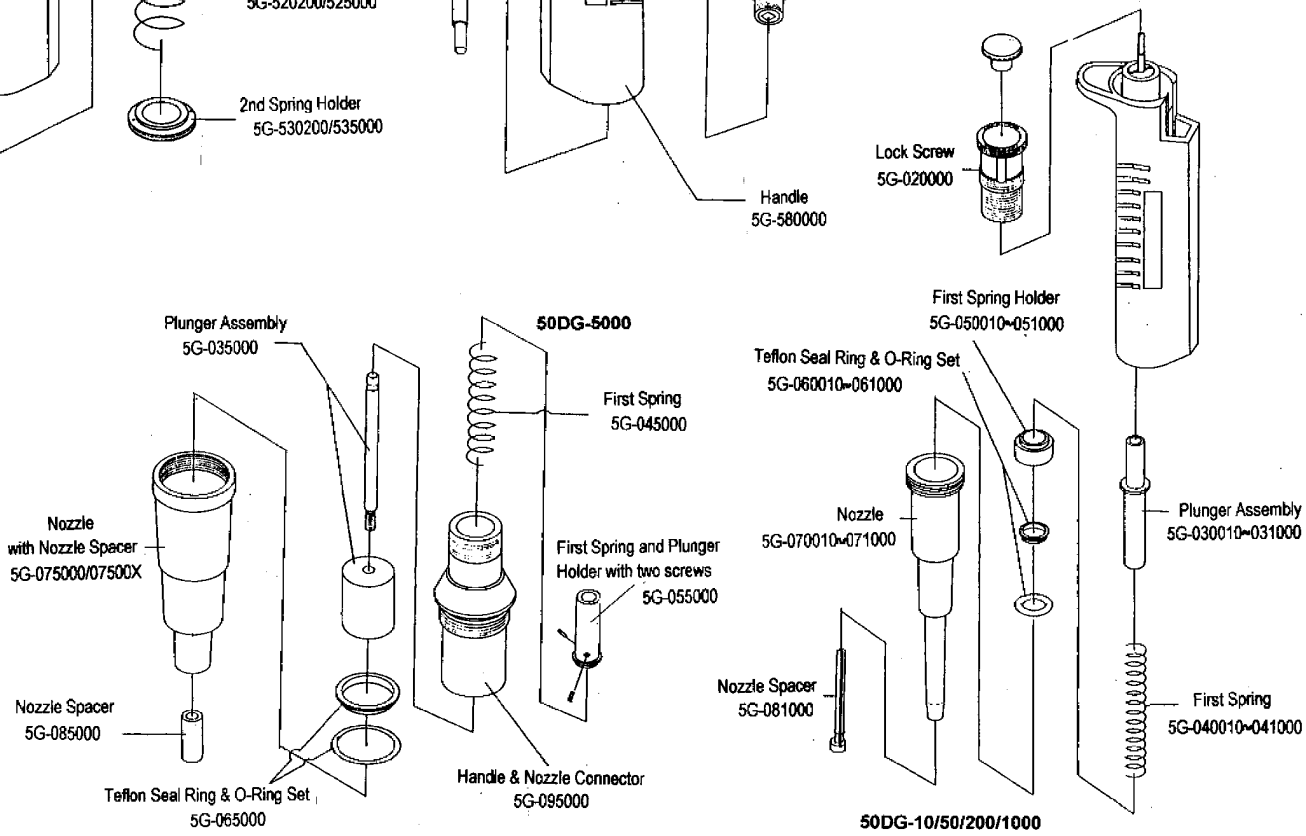
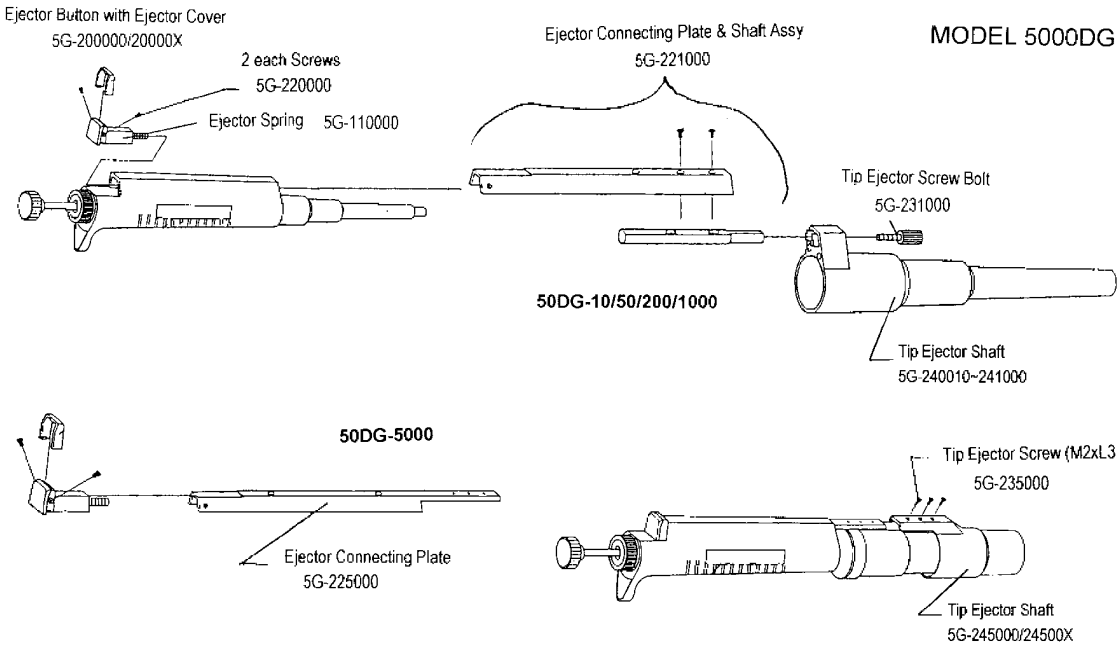
MODEL 5000DG